CARES Technical Approval Report TA2 5072

Issue 3

Electronic Copy www.carescertification.com

BETOMAX® systems
COMAX® Reinforcement Continuity System

Assessment of the BETOMAX® systems COMAX® Reinforcement Continuity System Product and Quality System for Production

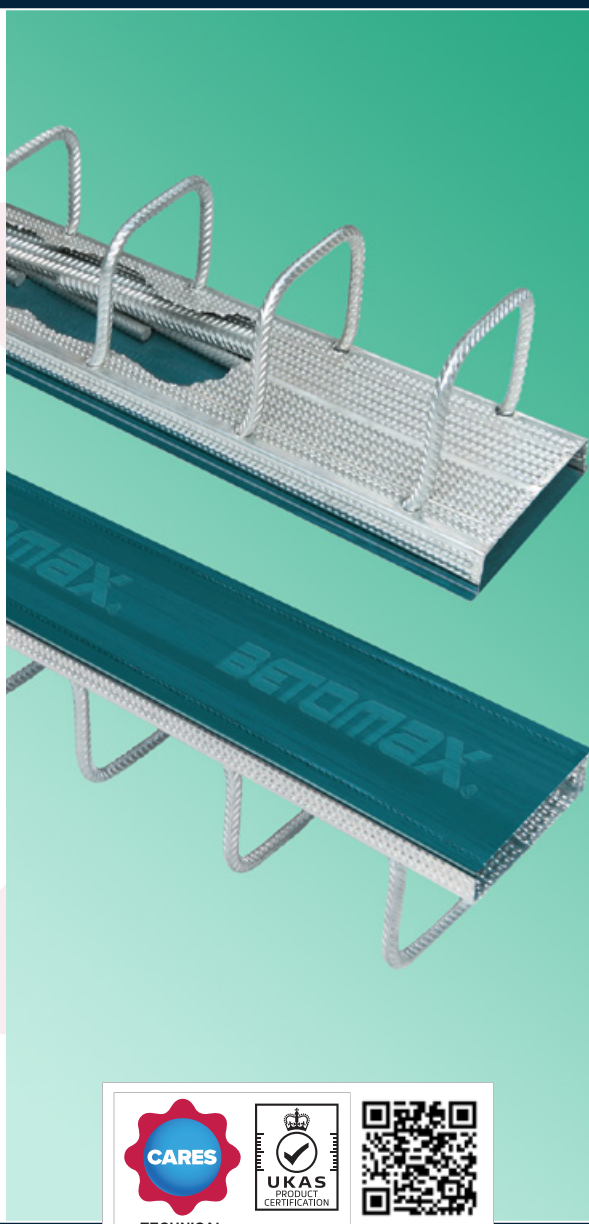

TECHNICAL APPROVAL 5072

0002

Validate with the CARES Cloud App

Product

BETOMAX® systems
COMAX® Reinforcement Continuity System

Product approval held by:

BETOMAX systems GmbH & Co. KG
Dyckhofstr. 1
D-41460 Neuss
Germany
Tel: +49-2131-2797-0
Fax:+49-2131-2797-70
Email: info@betomax.de Web: www.betomax.de

Electronic Copy www.carescertification.com

1 Product Summary

COMAX® is a prefabricated rebar continuity system for reinforced concrete construction. COMAX® provides a simple and cost effective method of reinforcement continuity across concrete joints.

COMAX® consists of pre-bent reinforcement bars and a casing, manufactured from galvanised steel, with a plastic cover for lower weight, easier handling and reduced risk of injury.

COMAX® is available in sizes 10mm, 12mm and 16mm. The reinforcement used is grade B500B and B500C to BS4449:2005+A3:2016 and is manufactured by the 'hot rolled and cold stretched' or 'quench and self-tempered' process route. The material is CARES approved, ensuring consistent compliance and traceability from steel mill to construction site.

Bending of the reinforcement is to BS8666:2005, except for the bends which are to be rebent on site, which are formed using formers which are no less than 6x the steel diameter.

1.1 Scope of Application

This approval covers use of the COMAX® reinforcement continuity system in reinforced concrete structures designed in accordance with Eurocode 2: BS EN 1992-1-1:2004 which are subject to static loading in non-cryogenic environments.

1.2 Design Considerations

In general the recommendations of EC2 apply directly, but there are two areas in which some elucidation of them is needed. One is the design of the anchorages of continuity bars in walls, for which the intentions of EC2 are not very clear. The interpretation used in the present assessment is detailed in 6.3.1 of this report. The other is the longitudinal shear resistance of joints and in particular those within walls. EC2 treats such shear at concrete-to-concrete interfaces and a similar form of expression has been derived from test results for the interfaces between the galvanised casings and concrete.

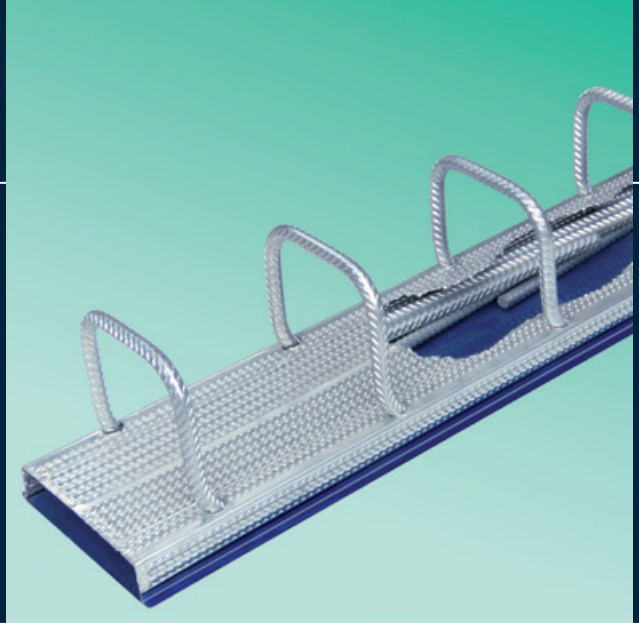

1.3 Conclusion

It is the opinion of CARES that BETOMAX® systems COMAX® continuity system in reinforced concrete structures are satisfactory for use within the limits stated in paragraph 1.1 when applied and used in accordance with the manufacturer's instructions and the requirements of this certificate.

L. Brankley
Chief Executive Officer
July 2023

Electronic Copy www.carescertification.com

CARES TECHNICAL APPROVAL 5072
UKAS PRODUCT CERTIFICATION 0002
Validate with the CARES Cloud App

2 Technical Specification

2.1 General

COMAX® consists of suitably proven reinforcement, factory pre-bent and factory-fitted into purpose designed carrier casings. The manufacturing processes are undertaken in a CARES quality assured environment in compliance with ISO 9001.

The COMAX® product is available in bar diameters 10mm, 12mm and 16mm. The reinforcement used is B500B and B500C to BS4449:2005+A3:2016 and is manufactured by the 'hot rolled and cold stretched' or 'quench and self-tempered' process route.

The type of reinforcement used is selected by BETOMAX® systems to provide a suitable degree of ductility, ensuring that it complies with the tensile requirements of BS4449:2005, grades B500B and B500C after pre-fabrication and bending on site.

The material is CARES approved and is regularly tested and monitored for its continued compliance and suitability. Full traceability is maintained at all times.

In all cases, the bends which are to be rebent on site, unless otherwise instructed, will be formed using 6ϕ(minimum) mandrels in accordance with established mechanical performance testing and safe practice.

Unless otherwise instructed, the anchorage bends (i.e. those embedded in the first concrete element and not rebent) will be formed using 4ϕ (minimum) mandrels as required by EC2 clause 8.3 (and its effective cross-reference to the local UK bending standard BS8666:2005) to avoid damage to the reinforcement. Regarding the performance requirements of anchorage bends, EC2 clauses 8.3 and 8.4 (particularly bond and bearing stress) should be considered by the structural designer, to determine whether a larger mandrel diameter should be specified to avoid damage to the concrete within the bends (6ϕ is the normal practical limit).

COMAX® is available in a wide range of customer-specified shape options.

Electronic Copy www.carescertification.com

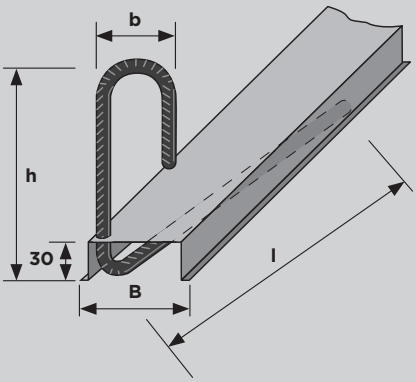

COMAX® TYPE 80

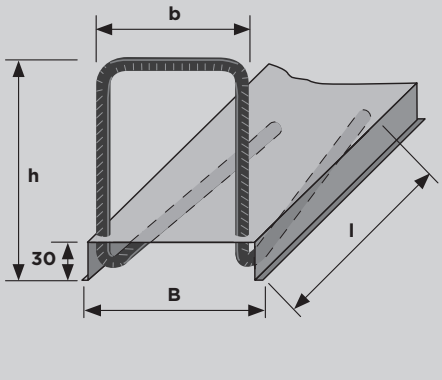

COMAX® TYPE 110 - 240

All dimensions in mm			
Length	1200		**Case**
Width B	80, 110, 140, 160, 190, 220, 240		
Depth	30		
Rebar	10, 12, 16		**Stirrup**
Height h	150 or 170		
Width b	Case width minus 20mm		
Lap Length l max.	10mm rebar	400	
	12mm rebar	480	
	16mm rebar	(550) 640	
Bars per box	6 or 8		

Electronic Copy www.carescertification.com

COMAX® Shape Variations

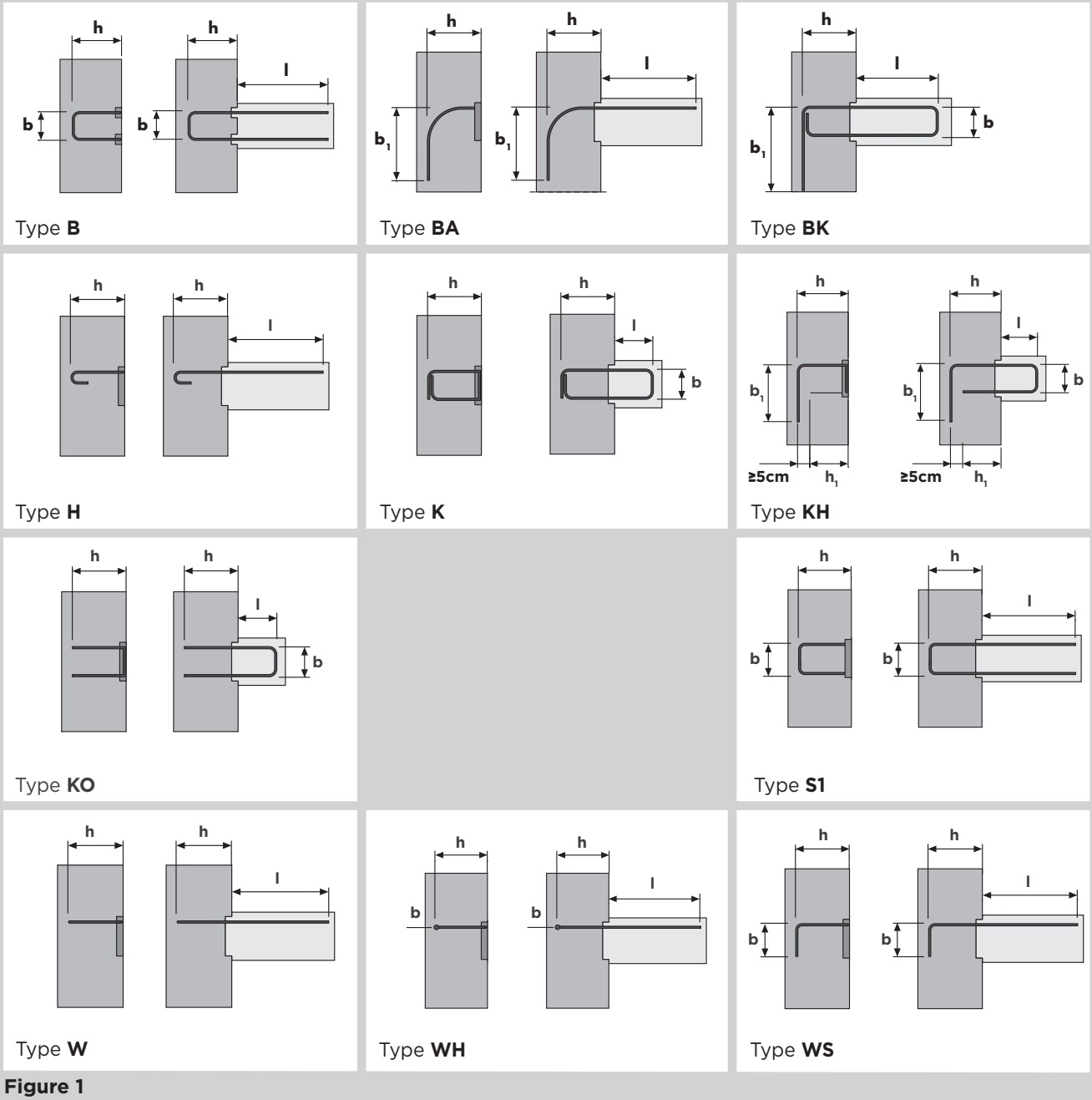

Figure 1

CARES TECHNICAL APPROVAL 5072
UKAS PRODUCT CERTIFICATION 0002
Validate with the CARES Cloud App

3 Product Performance and Characteristics

3.1 Reinforcement Tensile Properties

Mechanical tests on the reinforcement showed that the material, after bending and straightening, complied with the tensile requirements of BS4449, exhibiting values for Total Elongation at Maximum Load (A_{gt}) of greater than 5% for grade B500B and greater than 7.5% for grade B500C.

3.2 Structural Performance

Structural tests of wall/floor sub-frames and push-off specimens simulating joints between adjacent parts of walls showed that:

1) The shear strengths of the slabs, which were without shear reinforcement, could be safely calculated in accordance with EC2 (eqn 6.2a). There were no shear failures associated with the joints.

2) The flexural strengths of the wall/floor connections could be safely calculated on the basis of EC2's section 6.1 (Bending with or without axial force) and section 8 (Detailing of reinforcement) with the latter interpreted as in this report.

3) The widths of openings, that may develop at the rear faces of casings and between the ends of floor slabs and the faces of walls at the serviceability state, could be calculated as:

$$w = \frac{(y - x)}{(d - x)} \cdot \frac{\sigma_s^2 \phi}{4 E_s \tau}$$

where

- σ_s is the stress in the tension reinforcement of the slab at the face of the wall
- ϕ is the bar diameter
- E_s is the elastic modulus of steel (200×10^3 MPa)
- τ = $0.5\, f_{ck}^{2/3}$ for short-term loading or $0.4\, f_{ck}^{2/3}$ for long-term loading
- x is the cracked-elastic neutral axis depth
- d is the effective depth of the reinforcement (measured from the underside of the slab)
- y is the vertical distance from the underside of the slab to the level for which the width of the opening is calculated

4) The design resistance to shear at vertical joints between adjacent wall panels could be taken as:

$$V_{Rd} = 0.035\, f_{ck}^{2/3} + 0.5\, \rho\, f_{yd} \leqslant 0.1\,(1 - f_{ck}/250)\, f_{ck}$$

where

- V_{Rd} is the design shear resistance (stress in MPa) and
- ρ is the ratio of continuity reinforcement, with both V_{Rd} and ρ calculated with reference to the area of the back face of the casing
- f_{yd} is the design yield stress of the reinforcement, which should be adequately anchored at bothsides of the casing

The upper limit is based on the range of test data and not on any known physical limitation.

The test results have indicated that a value for the c in EC2 clause 6.2.5 (2) should be taken as 0.035. This value has been included in the equation for V_{Rd} set out above.

The equation applies to both types of casing, in view of limitations of the test data. It is probably rather conservative for the more heavily dimpled casings.

Electronic Copy www.carescertification.com

4 Installation

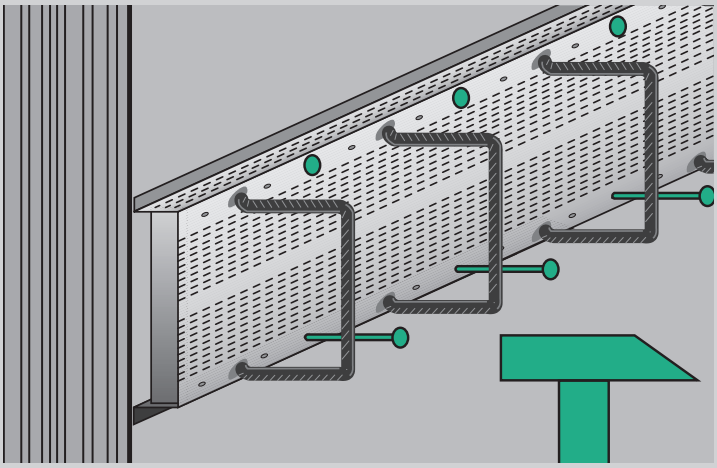

1 Fix to Formwork
Nail COMAX® into position on the formwork prior to pouring concrete.

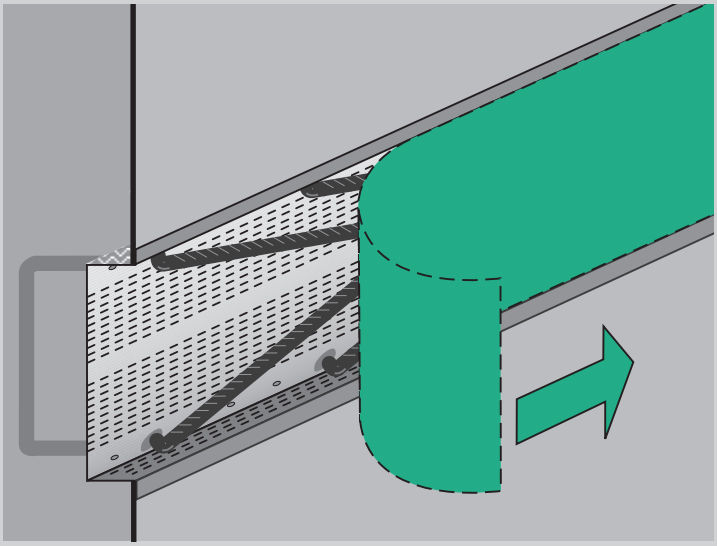

2 Remove Casing
Remove the plastic casing to reveal the reinforcement bars which are ready to be straightened.

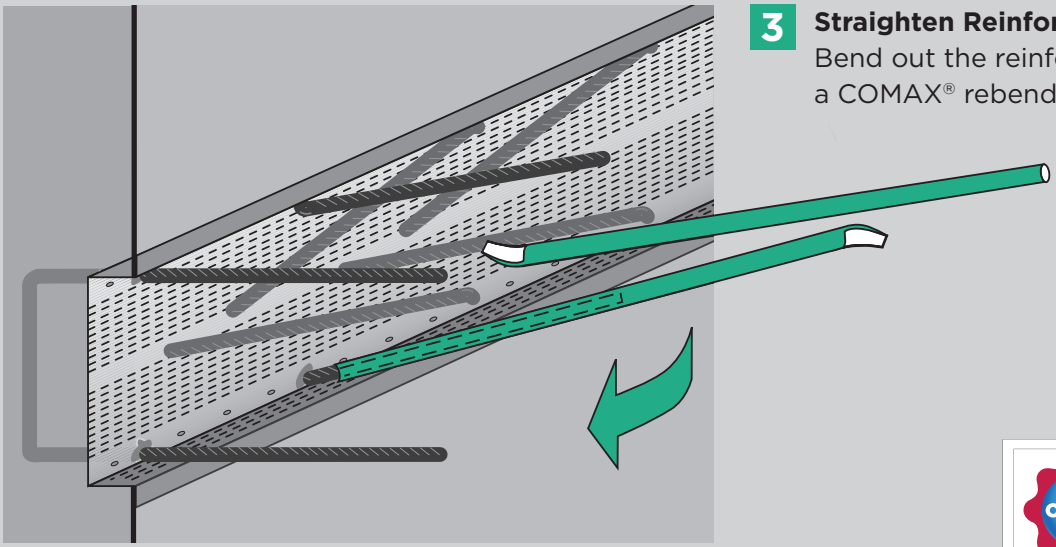

3 Straighten Reinforcement Bars
Bend out the reinforcement bars using a COMAX® rebending tube and prong.

Electronic Copy www.carescertification.com

CARES
TECHNICAL APPROVAL 5072
UKAS PRODUCT CERTIFICATION
0002
Validate with the CARES Cloud App

5 Safety Considerations

COMAX® should be stored safely on pallets for mechanical handling. Individual units weighing up to 25kg may be handled manually by one individual. Protective gloves, protective eyewear and steel toe cap boots should be worn when removing covers, straightening bars and general handling. For transportation, COMAX® should be strapped and then wrapped to the pallet.

COMAX® should be stored on pallets in a manner that prevents damage and corrosion.

6 Product Testing and Evaluation

6.1 General

The COMAX® reinforcement continuity system was evaluated in two stages:

6.1.1 The reinforcement was subject to independent mechanical testing to establish its suitability for bending during the prefabrication process and rebending through 90° degrees during the straightening process on site without surface rupture and for subsequent compliance with the tensile requirements of BS4449:2005 + A3: 2016.

6.1.2 COMAX® reinforcement continuity system samples were subject to a programme of full scale structural testing in concrete to evaluate the performance of the construction joints.

6.2 Mechanical Testing

The selected reinforcement was tested to determine the appropriate bend radii.

1) Reinforcement was subject to the CARES bendability test, which consisted of bending the reinforcement through 90° degrees over a steel former, straightening with the COMAX® tool and examination of the inside of the bend for signs of fracture. The test was conducted twice on each sample.

2) Reinforcement was also subjected to the CARES tensile test regime, which consisted of bending the reinforcement through 90° degrees over a steel former and straightening with the COMAX® tool prior to tensile testing to measure the Ultimate Tensile Strength, Yield Strength and Elongation at Maximum Load (A_{gt}). The selected reinforcement were found to comply with the tensile requirements of BS4449 Grades B500B and B500C according to Clause 7.2.3 Table 4.

The products are subject to a programme of periodic testing to ensure that they remain within the performance limits of this technical approval.

Electronic Copy www.carescertification.com

Electronic Copy www.carescertification.com

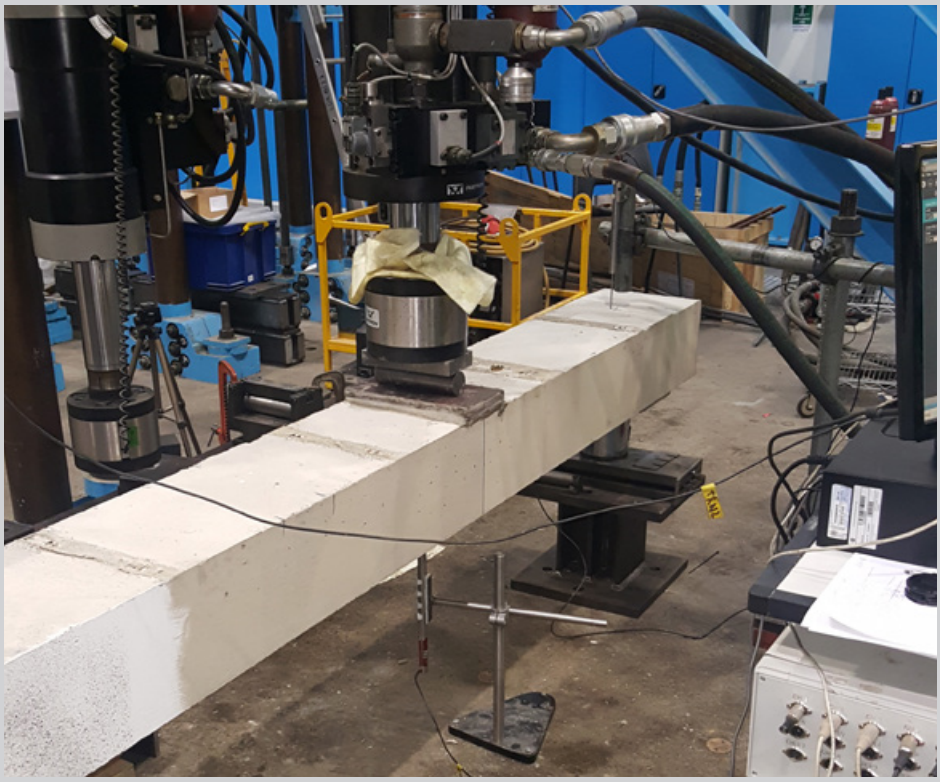

Figure 2 - Test arrangement

6.3 Full Scale Structural testing

Construction joints formed using the COMAX® reinforcement continuity system samples were subject to a programme of structural testing. Several wall to floor slab joints were subjected to vertical shear and bending and several wall to wall joints were subjected to longitudinal shear. The tests were full scale in terms of bar sizes and member depths.

The largest bar diameter 16mm bar was chosen for the majority of tests as being the largest bar size used in the COMAX® reinforcement continuity system and that which imposes the greatest stresses on the surrounding concrete and the most severe demands on the reinforcement in relation to bending and straightening.

The main conclusions are given in section 3.2.

CARES
TECHNICAL APPROVAL 5072
UKAS PRODUCT CERTIFICATION
0002
Validate with the CARES Cloud App

Electronic Copy www.carescertification.com

6.3.1 Assessment of Anchorage

In the evaluation of the results of tests the interpretation of the Eurocode used in this assessment is as follows in terms of design stresses. (In evaluations experimental stresses have been compared with values obtained from the expressions for characteristic stresses with actual values of f_c and f_y replacing f_{ck} and f_{yk})

1. The applied stress $f_{s,Ed}$ at the loaded end of an anchorage is calculated from the design moment M_{Ed} at the section at the inner face of the wall.

2. The anchorage is taken to begin at the rear face of the casing.

3. The stress $f_{s,Rd}$ that can be resisted by an anchorage, of either of the types shown in Figure 2, is the lesser of two values, one corresponding to the limit on the compression stress in the concrete at the start of the bend (EC2 eqn 8.1) and the other corresponding to the bond capacity of the active anchorage length.

4. The bond resistance available throughout the active anchorage length is taken as

$$f_{b,Rd} = f_{bd}/\alpha_1 \alpha_2$$

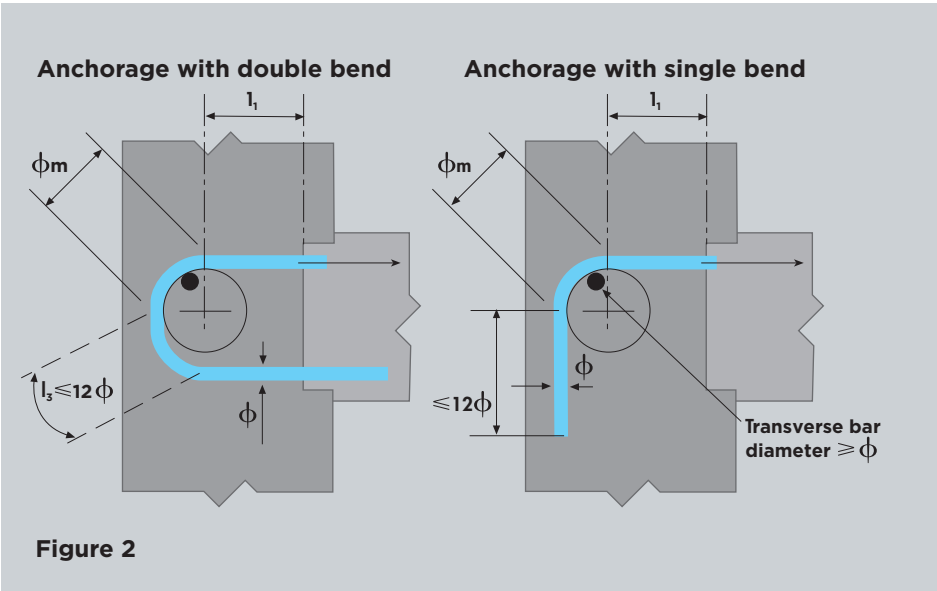

Figure 2

where

σf_{bd} is obtained from EC2's equation (8.2) using the strength of the wall concrete

α_1 = 0.7 for a bent anchorage with $c_d \geq 3\phi$ (EC2 table 8.2)

$\alpha_2 = 1 - 0.15\,[(c_d/\phi) - 3] \geq 0.7$ (EC2 table 8.2)

where

c_d for bent bars is the lesser of half the clear bar spacing and the clear side cover

5. The bar force which can be resisted at the start of the bend follows from equation (8.1) as

$$F_{bt,Rd} = \frac{\phi\, \phi_m\, f_{cd}}{0.5 + \phi / a_b}$$

where

ϕ is the bar diameter

ϕ_m mandrel diameter (= 2 x internal radius of bend)

a_b lesser of distance from centre of bar to a concrete face parallel to the plane of the bend and half the centre to centre spacing of the bars

6. The additional force that can be developed between the rear face of the casing and the start of the bend is $f_{b,Rd}$ x $\pi\phi$ l_1, where l_1 is the length from the rear of the casing to the bend. Thus the resistance as governed by consideration of bearing stresses is

$$F_{s,Rd1} = F_{bt,Rd} + f_{b,Rd} \cdot \pi\phi\, l_1$$

7. The value of $F_{s,Rd2}$, the resistance determined by the overall bond capacity, is

$$F_{s,Rd2} = f_{b,Rd} \cdot \pi\phi\, (l_1 + l_2 + l_3)$$

where

l_2 is the length within the bend $(\pi/8)(\phi_m + \phi)$

l_3 is the effective length beyond the end of the bend or first bend

For anchorages with two bends l_3 can be taken as the length from the end of the first bend to the end of the second bend < 12ϕ, provided that the lower straight section is not relied upon as compression reinforcement. For anchorages with single bends l_3 can be taken as the actual length $\leqslant 12\phi$.

The design resistance calculated as the lesser of $F_{s,Rd1}$ and $F_{s,Rd2}$ is the force that can be transferred from a bar to the concrete in contact with it and is specific to the details of the continuity reinforcement and the concrete surrounding it. The further transmission of this force and the others at the end of the slab to the parts of the wall above and below it depends on the distributions of these forces and on the wider detailing of the wall/floor joint, which may be approached by strut and tie modelling or other appropriate methods.

Electronic Copy www.carescertification.com

CARES TECHNICAL APPROVAL 5072 UKAS PRODUCT CERTIFICATION 0002 Validate with the CARES Cloud App

7 Quality Assurance

The BETOMAX® systems COMAX® reinforcement continuity system is produced under a BS EN ISO 9001 quality management system certified by CARES. The quality management system scheme monitors the production of the continuity system and ensures that materials and geometry remain within the limits of this technical approval.

8 Building Regulations

8.1 The Building Regulations (England and Wales)

Structure, Approved Document A

BETOMAX® systems COMAX® reinforcement continuity system, when used in EC2 based designs using the data contained within this technical approval, satisfy the relevant requirements of The Building Regulations (England and Wales), Approved Document A.

Materials and Workmanship, Approved Document

This technical approval gives assurance that the BETOMAX® systems COMAX® reinforcement continuity system comply with the material requirements of EC2.

8.2 The Building Regulations (Northern Ireland)

Materials and Workmanship

This technical approval gives assurance that BETOMAX® systems COMAX® reinforcement continuity system comply with the material requirements of EC2 by virtue of regulation *23, Deemed to satisfy provisions regarding the fitness of materials and workmanship.*

8.3 The Building Standards (Scotland)

Fitness of Materials

This technical approval gives assurance that BETOMAX® systems COMAX® reinforcement continuity system comply with the material requirements of EC2 by virtue of *Clause 0.8.*

Structure

BETOMAX® systems COMAX® reinforcement continuity system, when used in EC2 based designs using the data contained within this technical approval, satisfy the requirements of *The Building Standards (Scotland) clause 1.*

Electronic Copy www.carescertification.com

9 References

- BS 4449: 2005 Steel bars for the reinforcement of and use in concrete - Weldable reinforcing steel – Bar, coil decoiled product - Specification.
- BS 8666: 2005 Scheduling, dimensioning, bending and cutting of steel reinforcement for concrete - Specification
- BS EN 1992-1-1:2004 Eurocode 2 Design of concrete structures - General rules for buildings.
- BS EN ISO9001: Quality Management Systems - Requirements.
- CARES Appendix TA2: Quality and Operations Schedule for the Technical Approval of Reinforcement Continuity Systems.
- Imperial College Test report: Load Testing of COMAX® continuity units by A.D. Pullen 2018
- Dr R Vollum report: Evaluation of Comax continuity system from tests on reinforced concrete specimens, June 2018

Electronic Copy www.carescertification.com

CARES TECHNICAL APPROVAL 5072 UKAS PRODUCT CERTIFICATION 0002 Validate with the CARES Cloud App

10 Conditions

1. The quality of the materials and method of manufacture have been examined by CARES and found to be satisfactory. This technical approval will remain valid providing that:

   a) The product design and specification are unchanged.
   b) The materials, method of manufacture and location are unchanged.
   c) The manufacturer complies with CARES regulations for technical approvals.
   d) The manufacturer holds a valid CARES Certificate of Product Assessment.
   e) The product is installed and used as described in this report.

2. CARES make no representation as to the presence or absence of patent rights subsisting in the product and/or the legal right of BETOMAX® systems to market the product.

3. Any references to standards, codes or legislation are those which are in force at the date of this certificate.

4. Any recommendations relating to the safe use of this product are the minimum standards required when the product is used. These requirements do not purport to satisfy the requirements of the Health and Safety at Work act 1974 or any other relevant safety legislation.

5. CARES does not accept any responsibility for any loss or injury arising as a direct or indirect result of the use of this product.

6. This Technical Approval Report should be read in conjunction with CARES Certificate of Product Assessment No 5072. Confirmation that this technical approval is current can be obtained from CARES.

Electronic Copy www.carescertification.com

Electronic Copy www.carescertification.com



CARES
Pembroke House
21 Pembroke Road
Sevenoaks
Kent TN13 1XR

Phone: +44(0)1732 450000
E-mail: general@carescertification.com
www.carescertification.com

Independent Product Assessments for the Construction Industry

Copyright CARES ©

12.7.23